V300 Series
Casement, Project-Out, Fixed Mulls

All information seen within this document are considered current. However periodic changes/updates to our products are necessary. Quaker Window Products Inc. reserves the right to change any information without notice.

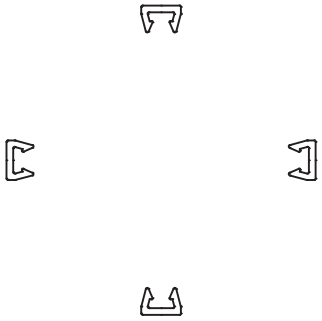

C-MULL
D633 (WHITE)
SD633 (SANDSTONE)

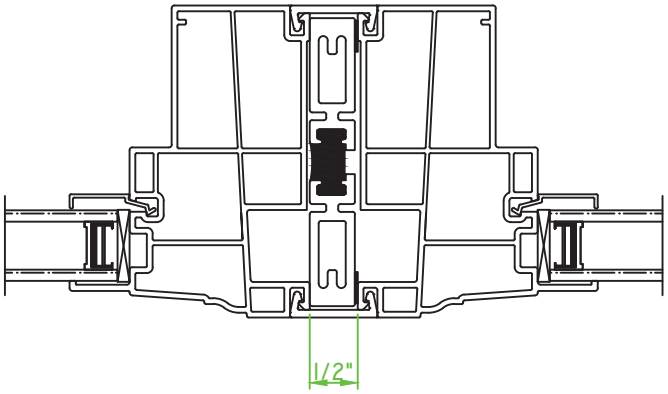

1/2" MULL
M20427 - MULL
MULL CAP:
D317 (WHITE)

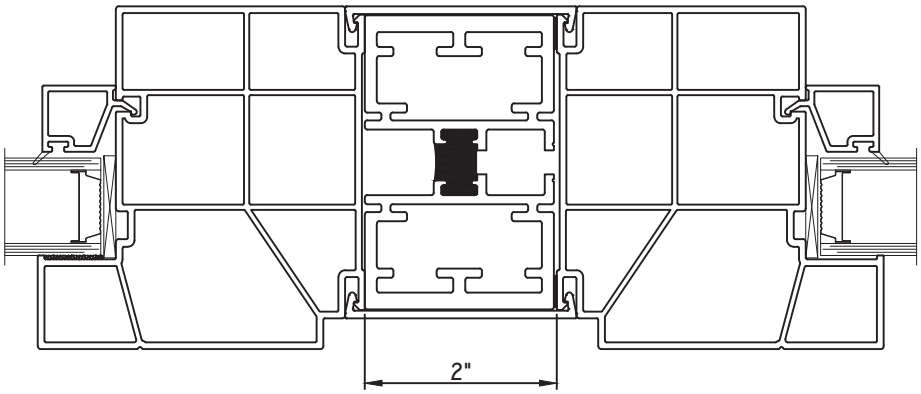

2" MULLION
M22784 - MULL
MULL CAP: M22941
C-MULL:
D315 (WHITE)
SD315 (SANDSTONE)

SCALE 1:2

Our products are tested to the standards of and certified by some of the foremost organizations in the fenestration industry.

V300 Series
Casement, Project-Out, Fixed Mulls

All information seen within this document are considered current. However periodic changes/updates to our products are necessary. Quaker Window Products Inc. reserves the right to change any information without notice.

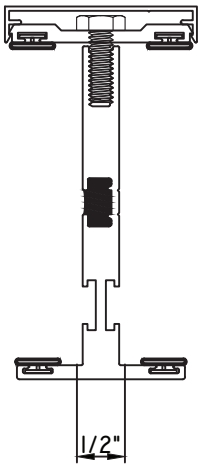

T-MULL

M24628 - T-MULL
MAX17386 - BASE
MAX14141 - CAP
BPN-9159 - W.S. (QTY. 4)
MH1/4 20X3/4 - BOLTS (18" APROX. O.C.)
M13404 - L-ANGLE (QTY. 2)
MF8-15X7/8-8HD - FASTENERS (QTY. 2)
MF8-15X1 1/2 - FASTENERS (QTY. 2)

MUST BE USED WITH STANDARD
3 1/4" RECEPTOR & SUBSILLS

SCALE 1:2

Our products are tested to the standards of and certified by some of the foremost organizations in the fenestration industry.